evoStim® T

Swiss Edition

Dual channels therapy unit for analgesic (TENS) and neuromuscular (NMS) electrical stimulation by trans-cutaneous electrodes

User guide

(Rev. 6.7 del 20/07/2020
of D.M. REF: evoStim Tse)

BEAC MED

CONTENTS

1 Intended use

***evoStim®* Tse** is a therapeutic unit aimed to the analgesic (TENS) and neuromuscular (NMS) electrical stimulation by self adhering surface electrodes. It offers a great ease of use without sacrificing the flexibility and performance.

Indications: *(*TENS) various types of pain treatment, for example: low back pain, neck pain, joint pain from arthritis and arthrosis, sciatica, muscle pain, rheumatism, post-traumatic and post-surgical pain, sprains, tendinitis, neuralgia, pain during labor. (NMS or EMS) treatment of non-use muscle hypotrophy, post-traumatic or post-surgical muscle re-education, muscle relaxation (spasticity), improvement of local circulation.

2 Introducing TENS

Electrical stimulation has been proven effective in the treatment of pain; the therapy is to alleviate the "pain" symptoms and does not provide curative effects on diseases. The analgesic effect may be different on different patients and according to the origin of pain. The electrostimulation TENS is not effective in the pain of central origin (for example: headache).

The "pain" symptom is a safeguard signal to the body. Reducing the “pain symptoms by TENS should not lead to neglect the search for the primary cause of pain.

How TENS works

At least two are recognised mechanisms through which the electrical stimulation reduces or eliminates the "pain" symptoms:

1 - The “Gate Control” theory

By means of special adhesive electrodes, the electrical impulses are applied to the skin of the painful area; therefore, through “faster” sensitive nervous fibres, they reach the pain management centres in the spinal cord, and prevent the transmission of pain to the brain.

2 - Hyper-secretion of endorphins

Moreover the electrostimulation stimulate our organism to increase the endorphin production, so raising the threshold of perception of the pain and effectively acting against the chronic pain.

Many people feel immediate benefit from TENS. However a minority may only achieve benefit after repeated treatment sessions and over an extended period of time.

3 Introducing NMS

NMS stands for Neuro Muscle Stimulation. After analgesic therapy, muscle activation, through electrical impulses, is the most widespread application of electrostimulation and finds application, in the rehabilitation field, in the prevention and treatment of localized muscle hypotonia.

How NMS works

By a pair of self-adhesive electrodes, the stimulation impulses are applied to the muscle; as a result, we will get contraction phases, alternating with relaxation phases of the muscle, exactly as occurs during normal physiological activity, but with the advantage of avoiding the general sense of fatigue.
The correct positioning of the electrodes is quite important in order to obtain maximum effectiveness. This manual does not include drawings or images

relating to the location of the electrodes. For this purpose, we have dedicated a specific guide for the correct positioning of the electrodes according to the area to be treated and the therapeutic objective.

4 CONTRAINDICATIONS

PLEASE CAREFULLY READ:

In the following circumstances, **evoStim® Tse** must NOT be used:

- During pregnancy.
- If you have a heart pacemaker or serious heart rhythm problems.
- If you are driving or using operating machinery.

In the following circumstances, **evoStim® Tse** can be used with caution:

1. If you have epilepsy, consult your doctor before using.
2. On children under 12, apply only under medical supervision.
3. WARNING: Electronic monitoring equipment such as EKG monitors and alarms can be affected with electrical stimulation.

IF IN DOUBT, CONSULT YOUR PHYSICIAN.

5 WARNINGS and PRECAUTIONS

1. Carefully read the User's manual before starting to use the unit.
2. This user manual is an integral part of the medical device; store it in a safe and protected place, possibly together with the device, to ensure the availability and readability.
3. Only use batteries AAA 1.5Volt Alkaline (LR03). The use of any other battery may damage the unit.
4. Remove the batteries when not used for prolonged periods (the release of acidic liquids, may irreparably damage the unit).
5. The appliance must not be used to treat painful syndromes of unknown origin or which have been insufficiently diagnosed.
6. Do not use the device during sleep.
7. Be careful when using the unit on patient with reduced sensitivity.
8. Keep the device and its accessories out of reach of children, the non-self-sufficient people or pets.
9. DO NOT apply electrodes on the throat or larynx nor over the carotid sinus or the sides of the neck, (the area of heartbeat detection). May increase the risk of abnormalities of blood pressure or heart rhythm.
10. DO NOT place any surface electrodes for stimulation in TRANS-THORACIC WAY. The application of the electrodes close to the thorax may increase the risk of arrhythmias or cardiac fibrillation.
11. DO NOT place any surface electrodes for stimulation in TRANS-CEREBRAL WAY. It could cause symptoms such as dizziness, nausea, vomiting, headache.
12. Do not apply the electrodes on the eyelids or around the eyes. It could affect the intra-ocular pressure
13. DO NOT place electrodes on/in the mouth. In case of inappropriate contractions may increase the risk of suffocation.

14. Avoid placing surface electrodes over any area affected by acute phlebitis.
15. DO NOT use the unit at a distance lower than 3 metres from any high frequency therapy unit (short wave or microwave) or close to a microwave oven.
16. DO NOT use the unit at a distance less than those indicated in the table on page 39, respect to a radio frequency communication device (RF transmitters, mobile phones, remote controls).
17. DO NOT the unit on a patient in which it is used simultaneously an electrosurgical high frequency device. It may increase the risk of instability of the device and / or burns under the electrodes.
18. Do not use the device on a patient on which a monitoring instrument for physiological parameters (such as ECG or others) is used simultaneously. It could be affected by electrostimulation.
19. The equipment can deliver electrical pulses with a current density higher than $2mA_{rms}$ / cm^2.
20. Store the unit and accessories in the pouch for storage and transportation.
21. Avoid violent impact and any improper solicitation of the unit.
22. DO NOT expose the unit or the accessories to temperature levels higher or lower than those recommended in the technical characteristics.
23. DO NOT use, transport or store the device in an ambient temperature above or below the recommended operating range.
24. DO NOT touch the unit in any way with wet hands, in order to prevent possible penetration of liquids.
25. DO NOT expose the unit to situations that could favor the penetration of liquids inside.
26. If in doubt whether liquids have penetrated inside the unit, it is advisable not to use the instrument and to send it to the manufacturer for testing.
27. Prevent the formation of condensate due to thermal sudden change.
28. In presence of condensate, avoid to switch-on the unit because it could be damaged.

29. In case of an evident or suspected defective operation of the unit, the user is suggested to send the unit to a BEACMED authorised technical after sale Servicing Centre, for a functional control.
30. NOT allowed any repair or modification of this device or its accessories unless previously authorised in writing by the Manufacturer.
31. Avoid to use the unit on more than a patient per session.
32. Use original accessories only.

6 CHECKING THE PACKAGE

The therapy unit ***evoStim®* Tse** has been designed for a friendly but effective use. Before using it, you should carefully read the chapters:
4 - CONTRAINDICATIONS and
5-WARNINGS and PRECAUTIONS.

The ***evoStim®* Tse** package should contain the following parts:

Q.ty	Code	Description
1	EVO-Tse	Unit evoStim® Tse
1	CV/evoStim_kit_T-UG	2 Gray bipolar cables with protected 2mm banana termination and mini axial connector. Length 99cm.
1	BAT/LR03-03	Kit 3 AAA alkaline batteries 1.5 V. (LR03)
1	ESTIM-KEY	Key for battery compartment opening
1	ESTIM-SUPP-PGB	Support for vertical support
1	EL/KITELETTRODI	Set of 4 adhesive electrodes
1	evoPouch	PVC carrying bag with necklace (IP02)
1	EStim_bag	Padded bag or rigid plastic handbag
1	ISTRU-evoStim Tse	this User Manual
1	ISTRU-EL	Electrode positioning illustration

After verifying that the content corresponds to what is listed above, you can proceed to prepare your unit for the session.

7 HOW TO ASSEMBLE evoStim® Tse

7.1 - BATTERIES

Remove the battery-compartment cover, inserting the special plastic key provided in the slot on the side of the door and pushing in the direction of arrow ⓐ (DO NOT turn the key!); Insert the three batteries supplied ⓑ, observing the polarity shown on the bottom of the battery compartment ⓒ.

Close the battery-compartment with the cover ⓓ.

Note: The unit may not work if one or more batteries are inserted in reverse. To test, press the ON / OFF button ① for 2 seconds, the LCD screen will switch-ON and will show some numbers and characters. Try then to press the ON / OFF button, holding it down for 2 seconds to check that the unit turns off.

CAUTION!: There is a risk of explosion if the batteries are fitted incorrectly. Replace only with AAA Alkaline 1.5 volt batteries (LR03). **Do not use other batteries.** Do not mix old and new batteries. Do not dispose of the batteries in a fire and keep them out of reach of children. The batteries must be removed from the device before it is scrapped and disposed of safely. When the unit is not used for a long time, you must remove the batteries to avoid deterioration and release acid liquid. This could irreparably damage the unit's electronics.

7.2 – CONNECT THE LEAD-WIRE (or LEAD-WIRES)

Unravel one or both leads and insert the plug(s) into either of the outlets, located at the base of the unit. If only using one lead, insert into the CH1 outlet as marked on the unit (㉗, ㉘).

7.3 - CONNECT THE ELECTRODES

Remove electrodes from the bag and connect to the leads. Each lead should connect to one electrode;

7.4 - PLACEMENT OF ELECTRODES

Ensure that the skin where you intend to place the pads is clean and thoroughly dry. Remove the pads from the clear plastic shield and position on your body as required.

7.5 - USE THE UNIT

Read the chapter "OPERATION", and select the program best suited to the situation.

Connect the cable/s

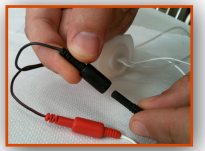

Connect the pads

Connection to pads Vs. wave-shape

First, decide whether to use one or two channels, based on the extension of the area to be treated.
The body maps on the “Electrodes placement guide” will also help you to decide.
The stimulation outputs must be connected, by means of suitable cables, to one or two pairs of electrodes.

The cables have two terminations with 2mm plugs, one RED, one BLACK. Using symmetrical biphasic pulses, the greater effect will be felt at the electrode connected with the RED plug. If the waveform is selected with "alternating biphasic pulses", there will be no predominance of one of the two electrodes.

8 OPERATION

Controls Reference

The ergonomics of ***evoStim®* Tse** unit is based on the rotation of the upper knob ① (to change the stimulation intensity or the value of various parameters) and the press of the button integrated in the same (to turn on, turn off or pause the unit). Increase or decrease of the intensity or any other parameter must first be enabled by touching the appropriate area of the touch display (touch-screen).
Functions of the encoder (the knob) is to allow selecting programs, as well as setting and adjusting any parameters of the selected program.
The push-button integrated in the knob allows the following operations:
switch-ON/OFF the unit (push and hold for 2 seconds);

- pause the unit (by briefly pushing down the button, then push again to resume), also useful as emergency push-button;
- Start the session. Push the button, provided that at least one channel intensity is set to an intensity different from zero;
- Resume the started session when an electrode alarm (open-circuit) has been solved (restored the output circuit/connection);
- Restore the factory parameters, when pushed-and-held for 2 seconds (only before starting a session) in combination with one of the touch-areas ⑪ or ㉒ or ㉖, as described in 8.2.13.

An RGB or multi-colour backlight helps reading the LCD display in low lighted environments and helps the patient to understand the different situations, provided that it has been enabled through the touch-button ㉕.
Here below the different situations/colour of backlight:
A **BLUE** light for 10 seconds when the units is switched-ON and every time the screen is touched, when the environment is dark. It means that, when the ambient light is not enough to read the display, the first touch of a button will not apply the normal operation of such button rather it will light-ON the backlight for 10 seconds.
Continuous short **RED** flashes when open-circuit is detected in the output.
Continuous short **GREEN** flashes when the unit is paused.
Continuous short **YELLOW** flashes when the unit is in editing.

Description of the commands (with reference to the paragraphs 8.1 and 8.2)

① - Upper rotating knob with push-button;
② - Label stimulation LEVEL of CH1 (8.1.4);
③ - Stimulation level CH1 (touch-area) (8.1.4);
④ - Label stimulation LEVEL of CH2 (8.1.4);
⑤ - Stimulation level CH2 (touch-area) (8.1.4);
⑥ - Symbol mA (touch-area) (8.1.4);
⑦ - Symbol wave-shape (touch-area) (8.1.3);
⑧ - Symbol Freq. (Hz) and Pulse-width (µs) (8.2.5 / 8.2.6).
⑨ - Value Freq. / Pulse-width (touch-area) (8.2.5 / 8.2.6);
⑩ - Symbols Freq.1 / Freq.2 (F1-F2) (8.2.6, 9.3, 9.6, 9.7);
⑪ - Number of program in use (touch-area) (8.2.8);
⑫ - Sub-programs ⒶⒷⒸ (touch-area) (8.2.12);
⑬ - Steps of stimulation cycle MUSCULAR (touch-area) (8.2.3 / 8.2.4);
⑭ - Symbol of PAUSE state (8.1.7);
⑮ - Time of stimulation cycle's steps (touch-area) (8.2.3 e 8.2.4);
⑯ - Label of stimulation cycle's steps times (8.2.4, 9.3, 9.5);
⑰ - Label of pain management method; will show the pain management technique according to the parameters;
⑱ - Symbol of "clock" (8.2.7);
⑲ - Session time display (touch-area) (8.2.7);
⑳ - Symbol "min'" (8.2.11);
㉑ - Buzzer enabling touch-area (8.1.8);
㉒ - Symbol "edit" (touch-area) (8.2.6, 8.2.7);
㉓ - Symbol LOCK state (8.1.6);
㉔ - Symbol "battery exhaust" (8.1.11);
㉕ - Back-light adjusting (touch-area) (8.1.9);
㉖ - Quick selection Buttons (6 touch-area) (8.2.8);
㉗ - Channel 1 outlet CH1
㉘ - Channel 2 outlet CH2

Functions of the upper knob: Press-and-hold down to switch ON/OFF. Press to START THE SESSION, PAUSE/RESUME. Turn to INCREASE or DECREASE the selected parameter or UNLOCK commands during the session.

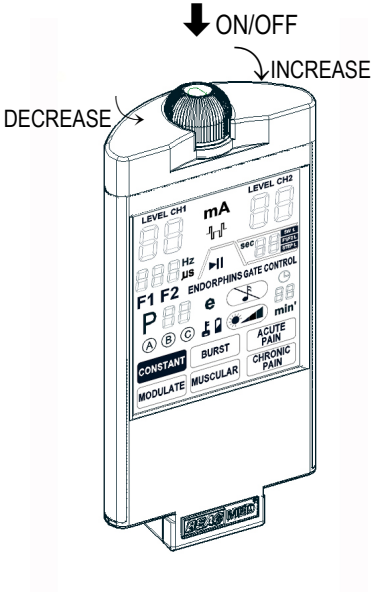

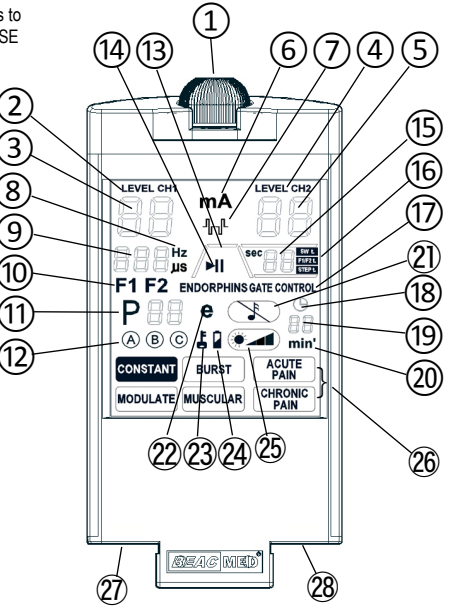

8.1 - QUICK START

8.1.1 Switch-ON the unit

Press for 2 seconds the button integrated in the upper knob ①. When the unit is ON, if the session does not start, the unit automatically turns off within 5 min.

8.1.2 Quickly select a program

Tap one of the six rectangular areas (QB) at the base of the display. The name of the selected QB will appear in reverse (with a dark background). Willing to change the program linked to the selected button, read the section 8.2.8.

If last used used program was the same, it is not necessary to re-select it as it will be automatically loaded when the unit will be switched-ON again.

8.1.3 The wave-shape choice

By touching the area ⑦, you can select the wave-shape of stimulation according to the placement of the electrodes (see page 12).

The same wave-shape used in the last session, will be automatically selected when the unit is switched-ON again.

8.1.4 Set the stimulation level

After selecting a program, (CONSTANT - BURST - MODULATE - MUSCULAR - ACUTE PAIN - CHRONIC PAIN), and after connecting the cables and applied the electrodes, tap the ③ area; The setting will remain enabled for 3 seconds during which the label ② will flash. Then turn the knob clockwise to attain a strong but not bothering stimulation. If you are also using CH2, repeat the operation by touching the area ⑤. In this case, wishing to simultaneously adjust the levels of CH1 and CH2, instead of touching the areas ③ and ⑤, touch the symbol "mA" ⑥, both labels ② and ④ will flash to indicate that the rotation of the knob will act on both channels. Briefly press the ① button to start the session.

8.1.5 - The open-circuit detection

If the stimulation level is increased with the output circuit open or load resistance too high (for example when the electrodes have not been connected to the wires or they are not well adhered to the skin or again the solid gel surface of the electrodes is dry and then no longer effective), the open-circuit protection will disable the output of the open channel and the intensity level will be forced to 0.
To visually show the open-circuit situation, the intensity value displays ③ o/a ⑤ will flash and the backlight will flash in RED (unless disabled).

8.1.6 Adjust the stimulation level during the session

10 seconds after starting the session, all the "touch" commands will be disabled (except the "Buzzer Enable / Disable" and the backlight adjusting); the symbol (㉓) will appear on the display.
To unlock the controls, turn for at least 1/4 turn the knob clockwise. To temporarily unlock the intensity change, tap the ③ area for CH1 or ⑤ for CH2, then turn the knob clockwise (to increase) or counter-clockwise (to decrease) until obtaining an energetic stimulation but not bothering.

8.1.7 Temporarily stopping the session (PAUSE)

During the session, you can temporarily stop it to modify a parameter.
Briefly press the ① button to pause the session. The pause state is visually reported by the symbol ⑭ and the green back-light of the display flashing (if enabled).
In the PAUSE status, you can change: the session time, the frequency, the pulse width, the Action time, the Rest time (see the chapter 8.2 for details).
To resume the session, briefly press the button ①.

8.1.8 Enable/Disable the “buzzer”

If the “buzzer” is enabled, you will hear a short beep every time you will touch a sensitive area of the display. Furthermore, an acoustical signal will remark an anomaly as well as the end of the

session. The "buzzer" is normally enabled, willing to disable it, touch the area ㉑.
For optimal use, we recommend you leave activated the "buzzer".

8.1.9 Change the backlight intensity

By touching the area ㉕, the backlight intensity of the "display" can be selected between 4 levels:

 backlight OFF suitable to daylight.

 backlight LEVEL 1, suitable to twilight.

 backlight LEVEL 2, suitable to dark.

 backlight LEVEL 3, suitable to dark.

8.1.10 Switch-OFF the unit

If the session is regularly started, when the session ends, the unit will automatically turn off. Willing to prematurely switch-OFF the unit, press for 2 seconds the button integrated in the knob ①.

8.1.11 Replacement of batteries

When the batteries are low, the symbol  will appear on the display. It is recommended to replace all three batteries with new ones of the same type.

8.2 - ADVANCED OPERATION

8.2.1 - ON/OFF + Pause

The push-button, integrated in the rotating knob, allows to switch-ON and switch-OFF the unit as well as START the session and PAUSE the stimulation in case of emergency. When a session is paused, it is possible to edit the running program or even select another one. Furthermore it allows to re-store the factory parameters as described in 8.2.13. Here below basic functions:

- To switch-ON the unit, hold down the push-button for at least 2 seconds;
- To re-start the preview sequence, (before starting the session) briefly push it;
- To pause the unit, (during the session) briefly push it and push again to continue the session;
- To switch-OFF the unit, hold down the key for at least 2 seconds.

8.2.2 - Program Preview sequence

The preview sequence is shown any time the unit is switched-ON.

The preview sequence may be also voluntarily activated, when the stimulation level of both channels are still 00, by briefly pushing the push button on the rotating encoder.

The preview sequence will lasts 4 seconds and is enabled selecting a MODULATE program or a MUSCULAR program including a rest time.

In case of MODULATE program:

The modulation may be of SWEEP type or Dual frequencies (F1/F2) type. In both cases there are two frequency values to show. In the sweep modulation there is also the sweep time while in the dual frequency modulation there is the persistence time of each frequency. In both cases, during the preview sequence will be shown respectively:

On the display ⑨ the starting Sweep frequency (F1) for 2 seconds, the ending sweep frequency (F2) for 2 seconds, and simultaneously on the display ⑮ the sweep time.

On the display ⑨ the frequency 1 (F1) for 2 seconds, the frequency 2 (F2) for 2 more seconds, and simultaneously on the display ⑮ the duration time of each frequency

In case of MUSCULAR program:

When the MUSCULAR stimulation program includes a rest time, then the program is characterised by the following parameters: Rise time (/ ___), Plateau time (/‾‾___), Fall time (/ ___), Rest time (/ ___). For easiness, the Rise-Plateau-Fall times may be gathered in the “Action time” (/‾___).

The preview sequence is aimed to show in sequence all the operating parameters of the loaded program.

The 2 digits display ⑮ will show in sequence the parameters Action time (Rise-Plateau-Fall) (for 2 seconds) and then the Rest time (for 2 seconds). Simultaneously, the display ⑨ will show the Frequency (for 1 second) and the pulse-width (for another second) taking place either during the Action time or the Rest time. Of course the symbols “Hz” and “µs” ⑧ will coherently switch-ON during the preview sequence.

To review the preview sequence after its termination, briefly push the encoder push-button and the preview sequence will start again.

If the MUSCULAR program has no REST time, the following symbol will be shown: /‾___.

During the preview sequence, the displays ③ and ⑤ along with the labels ② and ④ and the label ⑥ as well as the symbols ⑦ and ⑭ will be OFF. The intensity setting and then the stimulation can be started only after the preview sequence ending, when the displays ③ and ⑤ will show 00 and the symbols ②, ④ and ⑥ will be ON.

8.2.3 - Visualise Cycle-steps values (MUSCULAR programs only)

Before starting the session (that is to say before adjusting the stimulation levels) the lasting time of each-one of the 4 cycle-steps (Rise-Plateau-Fall-Rest), characterising the selected program, may be shown on the display ⑮. To switch from one to the next cycle-step, touch the area underlying the symbols of the cycle (/‾‾___) or the display ⑮.

After the session has started, the cycle-steps will automatically progress. Again for easiness, during the session, only the Action time (/‾___) which includes Rise-Plateau-Fall and the Rest time (/ ___) will be shown. The value of Action time

and Rest time will be then shown on the display ⑮ but the value will not be steady rather it will count-down to show the remaining time of either the Action time or the Rest time when they take place.

8.2.4 - Edit one or more cycle-steps time (MUSCULAR or MODULATE programs)

After the preview sequence and before starting the session, the duration of the 4 cycle-steps (Rise-Plateau-Fall-Rest) characterising a MUSCULAR program (**STEP t.**) or the SW t. (**SW t.**) or F1/F2 t. (**F1/F2 t.**) characterising a MODULATE selected program, may be edited (except for the default program P30, which are automatically controlled by the IntelliSTIM® function).

Repeatedly touch the area underlying the symbols of cycle ( ) or the display ⑮, as described in the previous paragraph, to visualise the parameter to edit;

- touch the "**e**" label ㉒ to enable the program editing; it will flash to show the editing state.
- touch the area underlying the symbols or the display ⑮ to allow editing the shown parameter, the symbol "**sec**" will flash for 5 seconds;
- change the value shown by turning the rotating encoder or leave it unchanged if you prefer.
- touch again the same area to switch from one to the next cycle-step and then edit them one-by-one if required.
- touch the "**e**" label ㉒ to disable the program editing, it will stop to flash.
  After the session has started, it is no longer possible to change any parameter unless the unit is paused.

If one or more of the cycle-steps parameter of the selected program have no longer the factory value (has been changed by the user) the program number ⑪ will slowly flash.

8.2.5 - Visualise Frequency or Pulse-width values

Further than by the preview sequence, it is possible to manually visualise the frequency and pulse-width values before starting the session.

By repeatedly touching the area underlying the display ⑨, values of Frequency and Pulse-width are shown in toggle on the same display; Correspondingly the symbols ⑧ ("**Hz**" and "**µs**") will be shown in toggle.
If the program includes two frequencies (F1 and F2 or F during Action and F during Rest) they will be show in sequence.
After the session has started, if the selected program is NMS, includes the Rest time and includes a frequency during Rest, the Frequency or Pulse-width shown on the display ⑨ will change according to either the Action time and the Rest time.
After the session has started, if the selected program is MODULATE, the display ⑨ will show the frequency occurring in any moment of the session, the display ⑮.will show the lasting of SWEEP time (for programs P10 to P15) or the lasting of each one of the two frequencies F1/F2 (for programs P16 to P19). Switching between Frequency and Pulse-width is always possible, even during the session (except for all MODULATE programs P10 to P19 and MUSCULAR programs P34 to P39) by simply touching the area underlying the display ⑨; correspondingly the symbols ⑧ ("**Hz**" and "**µs**") will be shown in toggle.

8.2.6 - Edit Frequency a/o Pulse-width

Before starting the session, the parameter Frequency a/o Pulse-width, characterising the selected program, may be edited.
The Frequency is editable in any programs, while the Pulse-width cannot be edited on the six default programs (P0-P10-P20-P30-P40-P50) because they are under the IntelliSTIM® function.

1. Visualise the parameter Frequency as described in 8.2.5.
2. Touch the symbol "**e**" to enable the program editing, it will flash to show the editing state. When editing is enabled ("**e**" blinking) the first touch of area underlying the display ⑨ will not produce the alternative visualisation of Pulse-width rather will allow editing the shown parameter (Frequency) for 5 seconds and that state will be shown by the symbol "**Hz**" flashing;

3. Adjust the value during that time by turning the rotating encoder. If you have not to adjust also the Pulse-width, leave the encoder steady for 3 seconds and the editing procedure will stop.
4. If you have to adjust also the Pulse-width, touch again the area underlying the display ⑨ while symbol “**Hz**” is still flashing, the symbols “**µs**” will appear then flashing for 5 seconds, the 3 digit display ⑨ will show the Pulse-width;
5. during that time, change the Pulse-width value by turning the rotating encoder. After 3 seconds the encoder is steady, any change is disabled.
6. If the program includes two frequencies (F1 and F2 or F during Action and F during Rest) and if you have to adjust also the second frequency, touch again the area underlying the display ⑨ while symbol “**µs**” is still flashing, the symbols “**Hz**” and “**F2**” will appear then flashing for 5 seconds, the 3 digit display will show the second frequency;
7. during that time change the second frequency value by means of the rotating encoder. After 3 seconds the encoder is steady, any change is disabled.
8. To exit the "editing" mode, without making any changes, if necessary touch the symbol "**e**", it will stop flashing.

After the session has started, it will be no longer possible to change any parameter, unless when the unit will be in pause state.
If the Frequency a/o the Pulse-width of the selected program have no longer the factory value (has been changed by the user) the program number ⑪ will slowly flash (0.5 Hz).

8.2.7 - Change the session time.

The session time is one of the parameters of each program. The default session time is shown in minutes on the 2 digits display ⑲. Changing of session time is allowed before the session starts or when the unit is paused. To permanently change its value:

1. touch once the “**e**” label ㉒ for enabling the editing;

2. then touch once the 2 digits value/area ⑲, the clock symbol ⑱ (🕒) will flash (1Hz) for 5 seconds;
3. during that time you may change the value by turning the rotating encoder; after 3 seconds the encoder is steady, the adjustment will be disabled.
4. To exit the "editing" mode, without making any changes, if necessary touch the symbol "**e**", it will stop flashing.

If the session time of the selected program has no longer the factory value (has bee changed by the user) the program number ⑪ will slowly flash (0.5 Hz).
During the session, the display ⑲ will count down and then it will show the remaining session time instead of the pre-set session time.
Changing the session time of a program in the range P46 to P49 and P53 to P59 (including more than one phase Ⓐ-Ⓑ-Ⓒ) is not allowed.
When a program in the range P40 to P59 is running, the display ⑲ will show the remaining time of the occurring phase. When the unit is paused the display ⑲ will show the remaining total time of the program.

8.2.8 - Select a program

When the unit is switched-ON, the last used program is loaded.
The 6 “touch-buttons” at the lower side of the LCD display define the program “MODE” or the “AIM” of the session.
Touch one of them to select a different MODE:

CONSTANT (corresponding by default to Program 0),
MODULATE (corresponding by default to Program 10),
BURST (corresponding by default to program 20),
MUSCULAR (corresponding by default to Program 30),
ACUTE PAIN (corresponding by default to Program 40)
CHRONIC PAIN (corresponding by default to Program 50).

The selected button will result with the dark background and the text OFF. The selected program will operate on both channels.

Up to 10 selectable programs may be linked to each-one of the 6 mode/aim quick selection areas:

CONSTANT by default linked to P0, may be linked instead to P1-P2-P3-P4-P5-P6-P7-P8-P9.

MODULATE by default linked to P10, may be linked instead to P11-P12-P13-P14-P15-P16-P17-P18-P19

BURST by default linked to P20, may be linked instead to P21-P22-P23-P24-P25-P26-P27-P28-P29

MUSCULAR by default linked to P30, may be linked instead to P31-P32-P33-P34-P35-P36-P37-P38-P39

ACUTE PAIN by default linked to P40, may be linked instead to P41-P42-P42-P43-P44-P45-P46-P47-P48-P49

CHRONIC PAIN by default linked to P50, may be linked instead to P51-P52-P53-P54-P55-P56-P57-P58-P59

For linking a different program to the selected mode/aim quick selection areas:

- touch the area underlying the label “P” and the two digit numbers ⑪, the symbol **P** will flash for 5 seconds;
- during that time the program shown on the two digit display (⑪) may be changed, within the range allowed by the selected aim button, by turning the upper knob; after 3 seconds the encoder will remain steady, the adjustment will be disabled.

The quick Mode/Aim selection and/or Program association are allowed only before starting a session or when the unit is paused. Selecting a different program will reset the stimulation intensity of both CH1 and CH2.

Details of programs are reported in chapter 9.

8.2.9 - Select the wave shape

According to the position of electrodes, the suitable wave shape has to be selected. If a single muscle/channel is involved, the most suitable wave-shape is “symmetrical bi-phasic pulses” (⊓⊔) while, if contra-lateral muscles are included in the circuit of one

channel, then the most suitable wave-shape will be "bi-phasic alternated pulses" (⊓⊓).
Such selection will involve both channels CH1 and CH2.
The default wave-shape is "symmetrical bi-phasic" however it is always possible to simply switch from one to the other pulse type, in toggle, by touching the touch-area underlying symbols ⑦.

8.2.10 - Adjust the stimulation level

Before starting a session, it is required to adjust the output stimulation level. If both levels of CH1 and CH2 are left to 00, the session cannot start.
The output stimulation level has to be adjusted after having placed the electrodes and, of course, after having connected the electrodes to the unit (as described in chapter 7).

- Touch the 2-digits display ③, the label ② will flash for 5 seconds and during that time adjusting stimulation level of CH1 will be enabled;
- while label ② is flashing, turn the rotating knob to obtain the most comfortable stimulation level.
- Touch the 2-digits display ⑤, if also CH2 has to be used, the label ④ will flash for 5 seconds and during that time adjusting the stimulation level of CH2 will be enabled;
- while the label ④ is flashing, turn the rotating knob to obtain the most comfortable stimulation level.

To simultaneously adjust the level of both channels CH1 and CH2, instead of touching the area underlying the display ③ a/o ⑤, touch the area underlying the symbol "**mA**" ⑥. Both labels ② and ④ will flash for 5 seconds and during that time adjusting the stimulation level of both CH1 and CH2 will be enabled. The stimulation level may be adjusted, in the same way, even during the session.

8.2.11 - Start the session

After having adjusted the output stimulation level, it is expected to start the session, even because, if the session will not start, the stimulation will be disabled after 10 seconds. To start the session, briefly push the button on the upper knob ①, the symbol "**min'**" ⑳ will flash and the display ⑲ will start to count-

down the session time. To prevent any unwanted action/command, after 10 seconds the session is started, the knob is steady and touch screen is not touched, the backlight will turn-OFF and the unit will be locked and the symbol 🔒 (㉓) will be shown. To unlock the unit, turn clockwise the upper knob a few degrees (5 steps), the backlight will turn-ON and the symbol ㉓ will disappear. Leaving the encoder steady and the touch screen untouched, after 10 seconds the unit will lock again.

8.2.12 – Apply a sequential program

Programs P46 to P49 and P53 to P59 include a sequence of 2 or 3 sub-programs having different therapeutical effects. They are indeed "sequential programs". If a sequential program including 2 or 3 programs has been loaded, will appear respectively the symbols Ⓐ-Ⓑ or Ⓐ-Ⓑ-Ⓒ.

The first program administered will be Ⓐ and the operating mode is the same of a single program.

At the end of Ⓐ program, a "double-beep" is emitted to remind the user to set the stimulation level for the program Ⓑ and start the program, as already described respectively in 8.2.10 and 8.2.11. The same happen when the Ⓑ program will end and the user is asked to set the stimulation level for program Ⓒ except that a "triple-beep" will be emitted. When a sequential program is running, it is possible to skip a sub-program, during the session: simply touch the area underlying the occurring program Ⓐ or Ⓑ or Ⓒ (the one blinking) and that sub-program will end. When a sequential program is administered, the display ⑲ will not show the whole session time rather the lasting of the current sub-program. However it is always possible to see the whole session time by pausing the unit.

8.2.13 - Restore the factory parameters

Any changes performed on one or more parameters of one or more programs will be retained.

If the user wish to reset to the factory values one program, one mode/aim range or the whole set of programs, there are 3 different procedures:

Reset a program:

- Select the program to reset
- touch and hold the area underlying the label “P” or the two digit numbers ⑪ and simultaneously push-and-hold the upper knob exactly as per switching-OFF the unit.

Instead of switching-OFF, the unit will remain ON and all the parameters of the selected program will be restored to the factory values.

Reset a mode/aim range (10 programs):

• touch and hold one of the 6 quick selection areas ㉖ (CONSTANT-BURST-MODULATE-MUSCULAR-ACUTE PAIN-CHRONIC PAIN) whose programs have to be reset and simultaneously push-and-hold the upper knob exactly as per switching-OFF the unit.

Instead of switching-OFF, the unit will remain ON and the 10 programs associated to the selected selection area will be restored to the factory values.

Reset the whole set of editable programs (60 programs):

• touch and hold the “**e**” symbol ㉒ and simultaneously push-and-hold the upper knob exactly as per switching-OFF the unit.

Instead of switching-OFF, the unit will remain ON and the 60 programs associated to all the 6 quick selection areas (modes/aims) will be restored with the factory values.

9 THE PROGRAMS

9.1 - Programs range

The 6 touch-area (or touch-buttons) allows a quick selection of a program according to the therapeutical aims. A default program is linked to each one of 6 touch button as described in 8.2.8.

P0 to P9 are devoted to the **CONSTANT TENS** stimulation mode; they are accessible when the mode CONSTANT is selected and t each of them may be linked to the touch-button CONSTANT.

The parameters of a CONSTANT program will never change during the session.

P10 to P19 are devoted to the **MODULATED TENS** stimulation mode and each of them may be linked to the touch- button MODULATE. The Frequency and Pulse-width of a MODULATE program may change during the session as described in 9.3

P20 to P29 are devoted to the **BURST TENS** stimulation mode and each of them may be linked to the touch-button BURST. In BURST mode the stimulation impulses are administered as “train of pulses”, as described in 9.4

P30 to P39 are devoted to the **NEURO-MUSCULAR** stimulation and each of them may be linked to the touch-button MUSCULAR. In MUSCULAR mode, the impulses are administered according to defined profiles, as described in 9.5

P40 to P49 are devoted to the treatment of ACUTE PAIN and may be linked to the touch-button ACUTE PAIN. See the chapter 9.6

P50 to P59 are devoted to the treatment of CHRONIC PAIN and each of them may be linked to the touch-button CHRONIC PAIN. See the chapter 9.7

All the programs from P0 to P59 (except the default programs P10 and P20), may be totally edited (Frequency, Pulse-width, Rise time, Plateau time, Fall time and Rest time) and changes will be retained even after switching-OFF the unit and removing the batteries). The programs P10 and P20

are assisted by the IntelliSTIM® function and then it is not required to modify the Pulse-width nor the Action/Rest time ratio according to the Frequency changes because that job is automatically performed indeed by the IntelliSTIM® function.
All the programs from P00 to P39 include just one phase then the symbols ⑫ will never be ON when one of such programs is loaded.
The programs from P40 to P59 may include 2 or 3 phases or sub-programs Ⓐ-Ⓑ or Ⓐ-Ⓑ-Ⓒ to more specifically mitigate either the ACUTE pain (P46 to P49) or the CHRONIC pain (P53 to P59).
Pictures of the electrodes placement is out of the purpose of this user guide. Please refer to the booklet:
"**Electrodes placement for TENS and NMS**".

9.2 - Key list of symbols used in the program tables.

F (F1) = Frequency (in Hz)

↔ = Pulse Width, in µsec. (micro-seconds)

🕐↗ = RISE Time (sec.)

🕐↱ = STIM Time (sec.)

🕐↘ = FALL Time (sec.)

🕐↳ = REST Time (sec.)

F ↳ (F2) = Frequency during rest (Hz.)

🕐 **=** Session time (min')

9.2 - Programs for CONSTANT stimulation

Default program is P0 and is subject to automatic adjusting function: Frequency is 85 Hz adjustable from 1 to 150 Hz. The standard pulse width is 100 µs., Adjustable from 40 to 400 µs.
Stimulation is continuous; no rest periods will happen. Session time default value is 30 min. (adjustable in steps of 5 min from 5 up to 90 min or C = Continuous). For setting to C the session time, turn the rotating knob counter-clock wise.
Changes of the session time will be retained. Instead of P0, a different program selectable from P1 to P9 may be linked to the CONSTANT touch-button.
They are locally and totally editable by the user and changes will be retained.

P	F (Hz)	↔ (µs)	🕒
0 (default)	85	100	30
1	100	150	30
2	10	200	45
3	20	200	30
4	20	200	60
5	8	400	20
6	8	200	30
7	2	250	30
8	75	50	40
9	120	40	40

9.3 - Programs for MODULATE stimulation

Default program is P10 and is subject to automatic Frequency/Pulse-width adjusting function.
Modulation is type S (Sweep) between F1 and F2;
Frequency 1 is 90 Hz adjustable from 1 to 150 Hz; Frequency F2 is 80 Hz. Pulse-width automatically changes
Instead of P10, a different program, selectable from P11 to P19, may be linked to the MODULATE touch-button.
They are totally editable by the user and any changes will be retained. Programs from P10 to P19 may be used to treat the pain by using a frequency modulation stimulation. Programs P10 to P14 apply a straight sweep modulation from F1 to F2, whose duration of each frequency is defined by the parameter SWeep time (**SW t.**). Program P15 apply a "random" (RN) modulation between F1 and F2 and the duration of each frequency is defined by SWeep time (**SW t.**).
Program P16 to P19 apply a dual frequencies switch modulation and duration of each frequency is defined by the parameter F1/F2 time (**F1/F2 t.**).

P	M	F1 (Hz)	F2 (Hz)	↔ (µs)	SW time (sec)	F1-F2 time (sec)	◷ min'
10 (def.)	SW	90 (adj)	80	Auto	1	-	30
11	SW	1	10	Auto	1	-	30
12	SW	10	20	Auto	1	-	30
13	SW	50	75	Auto	1	-	30
14	SW	75	100	Auto	1	-	30
15	RN	3	100	Auto	1	-	30
16	F1-F2	10	50	Auto	-	10	30
17	F1-F2	50	75	Auto	-	3	30
18	F1-F2	50	100	Auto	-	5	30
19	F1-F2	75	150	Auto	-	6	30

9.4 - Programs for BURST stimulation

Default program is P20 and is subject to automatic adjusting function. Default Frequency is 75 Hz adjustable from 30 to 130 Hz.
Pulse-Width will automatically adjust reverse-proportionally to the frequency (30Hz=250µs 130Hz=150µs) ACTION/ REST ratio (the ON/OFF of the burst) will automatically change. Session time default value is 60 min (adjustable in steps of 5 min from 5 up to 90 min or Continuous).
Instead of P20, a different program, selectable from P21 to P29, may be linked to the BURST touch-button. Only Frequency and Session time can be changed in such programs, by the user, and any changes will be retained.
Programs from P20 to P29 can be used in the treatment of back pain.

P	**F** (Hz)	↔ (µs)	(sec)	(sec)	(min')
20 (def.)	75	205 (Auto)	**1** (auto)	**2** (auto)	45
21	80	200	**0,5** (preset)	**0,5** (preset)	45
22	30	250	**2** (preset)	**2** (preset)	60
23	75	150	**0,5** (preset)	**1** (preset)	60
24	100	100	**0,5** (preset)	**2** (preset)	60
25	30	250	**2** (preset)	**2** (preset)	60
26	50	200	**1** (preset)	**2** (preset)	60
27	75	150	**0,5** (preset)	**1** (preset)	60
28	100	100	**0,5** (preset)	**2** (preset)	60
29	150	50	**0,5** (preset)	**2** (preset)	60

9.5 - Program for MUSCULAR stimulation

Default program is P30. Default Frequency is 40 Hz adjustable from 1 to 150 Hz; Default Pulse-width is 300 µs (adjustable from 40 to 400 µs).
The default session time value is 20 min' (adjustable in steps of 5 min from 5 up to 90 min or continuous). Instead of P30, a different program, selectable from P31 to P39, may be linked to the MUSCULAR touch-button.
They are totally editable by the user and any change will be retained. Lasting of the 4 cycle-steps (Rise-Plateau-Fall-Rest) characterising a MUSCULAR program are defined by the parameter STEP time (STEP t.).
Programs from P30 to P39 are suitable to selectively stimulate different kind of muscular fibres:

MY = Myorelaxing
WU = Warm-UP
CA = Capillarisation
RE = Resistance
TO = Toning
FO = Force
RF = Resistant Force
EF = Explosive Force

P	F (Hz)	↔ (µs)	(sec)	(sec)	(sec)	(sec)	F ↳ (Hz)	(min')
30 (def.)	40	300	1,5	4	0,5	10	-	15
31 (MY)	25	300	1	3	0,5	6	-	30
32 (WU)	60	350	2	5	1	15	-	10
33 (CA)	50	400	0,1	6	1	8	-	10
34 (RE)	35	250	1	8	1	8	-	10
35 (TO)	3	250	2	60	2	0	-	10
36 (RF)	5	250	3	60	3	0	-	5
37 (FO)	8	250	3	60	3	0	-	15
38 (EF)	50	350	0,1	6	1	8	-	10
39 (RE)	110	250	0	2	0	20	2	10

9.6 - Programs for ACUTE PAIN

Default program is P40. Frequencies are pre-set and cannot be adjusted. For the programs from P41 to P49, the Pulse-width automatically changes, and is inversely-proportional to the frequency. The session time is fixed and cannot be changed. Instead of P40, a different program, selectable from P41 to P49, may be linked to the ACUTE PAIN touch-button.

Program	Sub-Program	Modulation SW-2F-C	F1 (Hz)	F2 (Hz)	↔ (µs)	SW t. (sec)	F1/F2 t. (sec)	◷ (min')	◷ Total (min')
40 (def.)	A	SW (RDN)	50	100	75-40 (auto)	1	-	15	30
41	A	SW	75	100	50-40 (auto)	1	-	20	20
42	A	F1/F2	75	10	50-250 (auto)	-	10	20	20
43	A	C	75	-	50 (auto)	-	-	20	20
44	A	SW	1	100	400-40 (auto)	1	-	30	30
45	A	C	100	-	40 (auto)	-	-	15	15
46	A	C	3	-	340 (auto)	-	-	3	30
	B	C	75	-	50 (auto)	-	-	27	
47	A	C	3	-	340 (auto)	-	-	3	30
	B	SW	50	100	75-40 (auto)	1	-	20	
	C	SW	14	2	210-380 (auto)	1	-	7	
48	A	C	3	-	340 (auto)	-	-	3	30
	B	F1/F2	70	90	55-40 (auto)	-	5	15	
	C	SW	10	100	250-40 (auto)	1	-	12	
49	A	C	3	-	340 (auto)	-	-	3	30
	B	SW	1	10	400-250 (auto)	1	-	10	
	C	SW	60	80	65-45 (auto)	1	-	17	

9.7 - Programs for CHRONIC PAIN

Default program is P50. Frequencies are pre-set and cannot be adjusted. For the programs from P51 to P59, the Pulse-width automatically changes, and is inversely-proportional to the frequency. The session time is fixed and cannot be changed. Instead of P50, a different program, selectable from P51 to P59, may be linked to the CHRONIC PAIN touch-button.

Program	Sub-Program	Modulation SW-2F-C	F1 (Hz)	F2 (Hz)	↔ (µs)	SW t. (sec)	F1/F2 t. (sec)	◷ (min')	◷ Total (min')
50 (def.)	A	SW	1	25	400-100 (auto)	1	-	30	30
51	A	F1/F2	3	10	360-250 (auto)	-	10	30	30
52	A	SW (RND)	1	15	400-200 (auto)	2	-	30	30
53	A	C	3	-	400 (auto)	-	-	5	30
	B	SW	1	25	400-100 (auto)	1	-	20	
54	A	C	3	-	400 (auto)	-	-	5	30
	B	F1/F2	3	10	360-250 (auto)	-	10	25	
55	A	C	3	-	400 (auto)	-	-	5	30
	B	SW (RND)	1	15	400-200 (auto)	2	-	25	
56	A	SW	3	12	400-230 (auto)	1	-	10	40
	B	SW	75	5	50-300 (auto)	1	-	15	
	C	SW	10	2	250-380 (auto)	1	-	15	
57	A	C	3	-	400 (auto)	-	-	5	40
	B	SW	1	25	360-250 (auto)	1	-	15	
	C	F1/F2	3	10	400 (auto)	-	10	20	
58	A	C	3	-	360-250 (auto)	-	-	5	40
	B	F1/F2	3	10	400-200 (auto)	-	10	15	
	C	SW	1	15	250-40 (auto)	2	-	20	
59	A	C	2	-	400 (auto)	-	-	5	40
	B	C	5	-	300 (auto)	-	-	15	
	C	C	10	-	250 (auto)	-	-	20	

10 Technical features:

Output: 1 to 99 mA_{pp} in steps of 1 on a standard load 1KΩ (with a pulse width of 200µs).
Frequency – adjustable from 1 to 150 Hz ± 5% of F.S..
Pulse Width – adjustable from 40 to 400 µs. in steps of 10 (± 5% of F.S.)
Output wave-shape: selectable between bi-phasic symmetrical pulses and bi-phasic symmetrical alternated.
RISE time - 0 to 5 s. In steps of 1 s. (± 0,1 s.).
PLATEAU time - 1 to 60 s. In steps of 1 s. (± 0,1 s.).
FALL time - 0 to 5 s. In steps of 1 s. (± 0,1 s.).
REST time - 0 to 60 s. In steps of 1 s. (± 0,1 s.).
REST frequency - from 0 to 10 Hz. (± 1% of F.S.).
SWEEP time – from 1 to 90 s. (± 0,1 s.).
F1/F2 time - from 1 to 90 s. (± 0,1 s.).
Supply voltage 4,5 V by 3 alkaline primary batteries 1,5 Volt type AAA (LR03).
Battery life: 20 hours average (variable according to the program and the output level set).
Session time: selectable between 15, 30, 45, 60, 90 min' (± 1 s.) or Continuous.
Electrical safety: Internal supply according to CEI 62-5 IEC 601-1 (3a edition).
Overall dimensions: 73x147x25mm.
Weight: About Kg 0,2 (including batteries)
Environment using limits: +5 / +40°C U.R.15% / 93% 700hPa / 1060hPa.
Transport and storage limits: -25 / +70°C U.R. 93%.
Electromagnetic susceptibility: Class A according to CISPR 11.
Output connections to applied parts: 2 channel (Ch.1) with coaxial micro outlets to which connect the gray bipolar cables, ending with 2 mm protected plugs.
Protection against the penetration of solids and liquids:
evoStim it is rated IP20: objects larger than 12.5mm cannot penetrate the casing, it is not protected against the penetration of liquids.
evoStim inserted in the evoPouch it is classified IP22, i.e. it is also protected from dripping

11 Labelling and symbols

This product is CE marked in accordance with Annex II of Directive 93/42 / EEC / MDD, under Rule 9 of Annex IX. E 'classified as type IIa Medical Device. No. 0051 indicates the Notified Body that issued the authorisation to the CE marking.

CE Marking authorised by the Notified Body IMQ (0051)

Reference to the catalogue

Follow the user guide.

Applied parts type BF

The appliance emits energy in the form of electrical impulses.

Battery powered

Serial number

Manufactured by:

Manufactured on:

Keep dry

IP20

Degree of protection against the penetration of solids and liquids.

Recommended separation distances between portable and mobile RF communication equipment (RF) and the EvoStim® Tse unit

The evoStim® Tse unit is intended for use in the electromagnetic environment in which radiated RF disturbances are controlled. The customer or the user of the evoStim® Tse can help to prevent electromagnetic interference by maintaining a minimum distance between portable and mobile RF communications equipment (transmitters) and the unit as recommended below, according to the maximum power of communications equipment.

Rated maximum output power of RF transmitter (W)	**Separation distance according to frequency of transmitter**		
	150 KHz to 80 MHz (m)	80 MHz to 800 MHz (m)	800 MHz to 2,5 GHz (m)
0,01	0,117	0,117	0,233
0,1	0,37	0,37	0,74
1	1,17	1,17	2,33
10	3,7	3,7	7,4
100	11,7	11,7	23,3

12 Trouble-shooting table

Sign	Comments / Probable causes	Suggested remedies
The unit does not switch-ON	Verify the correct insertion of batteries(7.1).	
	Batteries are low.	Replace the batteries (7.1).
	Make sure that the contacts of the battery are not missing, broken or oxidised.	If batteries had remained for a long time into an unused unit, some acidic liquid may have aggressed the contact springs. Try to clean the contacts and replace batteries with new ones. Otherwise contact the manufacturer.
The unit cannot switch-OFF	Be sure to properly press the shutdown button and hold it for at least 2 seconds (8.1.10).	Remove the batteries from the battery compartment and wait at least one minute before re-insert them (7.1). Otherwise contact the manufacturer.
After starting, the device switches itself off.	It is expected that, 5 min 'after power up and if a therapy session may not start, the unit automatically turns off to conserve battery power.	
	The batteries are low.	Replace the batteries (7.1).

Sign	Comments / Probable causes	Suggested remedies
You can not adjust the intensity level of electro-stimulation.	Be sure to follow the steps specified in the user manual (8.1.6).	
	The device is equipped with a Control Lock system to prevent accidentally changing the intensity level and the parameters during the session (8.1.6).	To unlock the controls and allow the intensity adjustment during a treatment session, make a clockwise rotation of the knob fully clockwise and then touch the intensity value, it is now possible to change the value. The control-lock system will return after 5 seconds of inactivity on the operator's controls of the unit.
	When you try to set the intensity, the value drops to "0" and the display will flash red.	The output circuit connection to the patient is interrupted. Check the connection of cables and electrodes. If required, replace the cable/s. If the wires and their connection is ok, there may be insufficient contact between the electrodes and the skin. Try to moisten the gel surface of the electrodes with water. If necessary, replace the electrodes with new ones.
The unit is ON but no operations are allowed.	Remove the batteries, wait a few minutes and re-insert them.	If the problem persists, contact the manufacturer or distributor.

Sign	Comments / Probable causes	Suggested remedies
Strange symbols randomly appear on the display.		Try to replace the batteries (7.1). If the problem persists, contact the manufacturer or distributor.
The buzzer cannot be heard.	Make sure it has not been disabled (8.1.8).	If the problem persists, contact the manufacturer or distributor.
Stimulation is no longer felt by the patient and the backlight flashes red (if enabled).	The "open circuit protection" (8.1.5) intervened. The circuit connection of the unit to the patient is interrupted or the contact of the electrodes with the skin is insufficient.	The output circuit connection to the patient is interrupted. Check the connection of cables and electrodes. If required, replace the cable/s. If the wires and their connection is ok, there may be insufficient contact between the electrodes and the skin. Try to moisten the gel surface of the electrodes with water. If necessary, replace the electrodes with new ones.
No longer feel any stimulation, the symbol ⑭ is lit on the display and the backlight slowly blinks green (if enabled)	The device is in the state of "PAUSE" (8.1.7). Maybe you have inadvertently pressed the button integrated in the ① upper knob..	To resume the session just briefly press the ① button.
The program number flashes during the pause and before starting the session	means that one of the parameters has been changed	to restore the factory parameters, see section 8.2.13

13 CLEANING

13.1 Clean the unit

To clean the plastic housing of the fixture of the display and cables, use a soft, slightly damp cloth (NOT soaked) in alcohol.
DO NOT use water or water based cleaners.

13.2 Maintenance of the unit

Remove the batteries from the appliance when it is not used for prolonged periods (the release of acidic liquids could irreparably damage the appliance).
NO repair or modification of this appliance or its accessories is permitted unless previously authorized in writing by the Manufacturer.

13.3 Cleaning and maintenance of self-adhering electrodes

The self-adhering electrodes, with solid gel, can be use you for various treatments, on the same patient. Being for personal use, they do not require any clearing or or disinfection procedure. When not in use, the electrodes must be stored on the special transparent plastic sheet. The conditions of the electrodes affect the conductivity and therefore the effectiveness of treatment. When the electrodes are beginning to lose peel adhesion, you can try to re-activate them by using sprayed water. When the electrodes has completely lost their peel adhesion, they shall be replaced with new ones.
Although the electrodes are not allergenic, exceptionally may occur allergic reactions. In this case discontinue treatment.

WARRANTY

The Manufacturer will repair free of charge or replace the defective units found, within two years from the date of purchase by the customer.

The guarantee applies only if: the product has been used for the purpose for which it was designed, it has not been damaged by misuse, has not suffered accidents or neglect, has not been modified or repaired by someone not authorised by the Manufacturer. Detecting a fault, make sure that the unit was used according to this manual. Only in this case, send (at their own expense) the apparatus fitted with this certificate of guarantee and the receipt that attests to the purchase, to your dealer or retailer.
Note: Repairs must only be carried out by personnel authorised by the Manufacturer.

DISCLAIMERS: batteries are excluded from this warranty as they are subject to normal exhaustion. The electrodes are excluded from this warranty as subjected to normal wear.

USER name (in CAPITALS):.....

USER Address (in CAPITALS):.....

Other USER data (Tel. Fax. E-Mail):.....

Additional USER data (Tel. Fax. E-Mail):.....

Description of the defect/failure (in CAPITALS):.....

Unit model **evoStim® Tse**

Serial N. .....

Purchase date: Month:.....Year:.....

Fill in, crop, insert in an envelope and send to the dealer or to the Manufacturer, only in the event of a defect or failure.

14 Information for disposal of product.

This symbol indicates that the product (as Electric or Electronic product) must be disposed of separately from normal waste, at the end of its operational lifetime.

Please dispose of this product by bringing it to your local collection point or recycling centre for such equipment. This will help to protect the environment in which we all live. Such obligation derives from directive 2002/96/CE, opportunely applied by the governments of every country member of the European community. The product contains parts that can be recovered or eliminated in differentiated way, contributing to the environmental improvement. The product contains substances which, if wasted in unsuitable way, can have harmful effects on the environment and the human health. The Producer is available to withdraw the product, at the end of its cycle of life, for an appropriated recovery or elimination. Please contact the BEAC local distributor, to ask detailed information on the program of collection and recovery for this product.

www.beacmed.eu

Distributor:

parsenn-produkte ag
kosmetik • pharma • med. geräte
Klus, CH-7240 Küblis www.parsenn-produkte.ch